Jigsaw
RUBBER MATTING



Installation Guidelines

Gripfoot

Equipment & Materials

- Clean Cloth
- Tape Measure
- Dust Pan & Brush
- Bucket & Mop
- Cleaning detergent
- Degreasing solvent
- Scissors
- Protective Gloves
- Scraper (Optional)
- Hand Roller or Rubber Mallet

Materials

- Gripfoot



Gripfoot

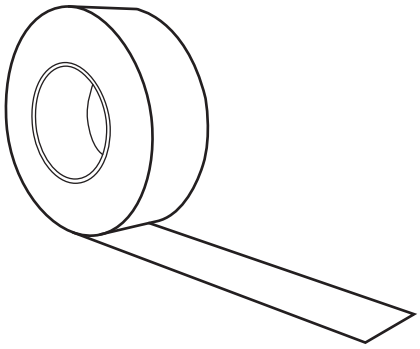

Preparation

For best results it is advised to install **Gripfoot** on a level and clean floor. Simply follow these simple steps to achieve a durable, clean and adaptable flooring finish in your chosen area:



Clean & Maintenance

In order to maintain the effectiveness of the grit surface with regard to slip resistance, it is very important that the top surface is kept clean. The surface of the tape itself can be cleaned as needed using a mild detergent cleaner.



Surface check

Ensure the area being covered is clean, dry and free from grease.

Application

1

Preparation: Sweep up any dirt and debris and remove any stubborn marks/residue with a degreasing solvent. Then mop/clean the stairs using your standard cleaning method.

The floor needs to have a damp proof membrane, otherwise the adhesive will not bond efficiently to the floor surface and is likely to come up.

Before you apply Gripfoot make sure that the surface is completely dry and not too cold.



2

Measure the width of the step and cut the tape to size with scissors before application. Round off corner edges now, if desired.

Rounded corners:



Straight corner:



3

When peeling off the paper backing try to keep fingers off the adhesive.

Position the tape so that it is roughly 15 – 20mm away from the front edge of the stairs.

Position and press into place pushing from the centre out to the edges to remove air bubbles. Use a rubber mallet or hand roller to get maximum adhesion.

Peel of the backing of the tape in small sections for an accurate and secure installation.

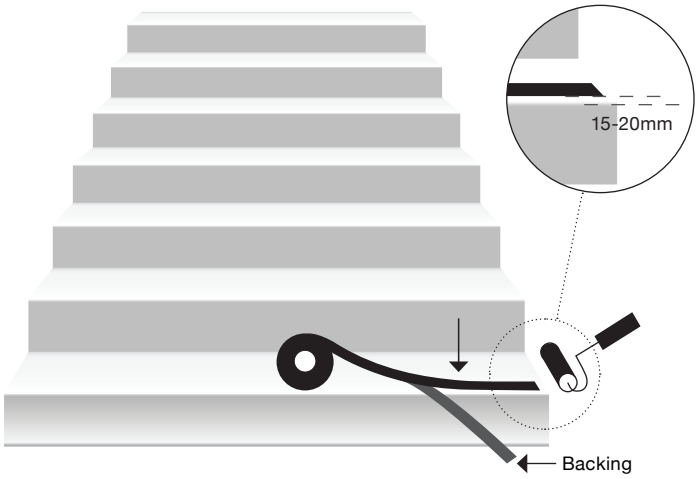

4

The area can be used immediately after the tape is applied.

If you require any additional information about the cleaning and maintenance of these tiles please email:

01260 272313 | info@rubber-matting.co.uk

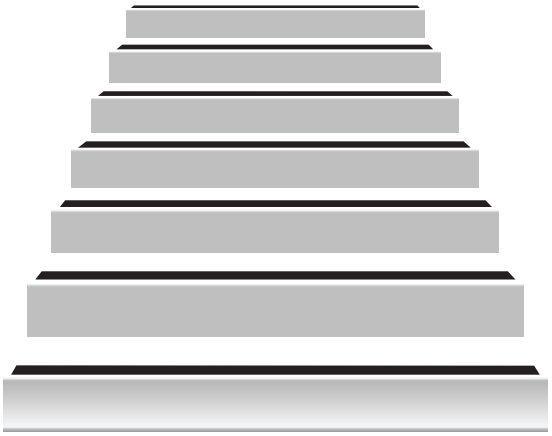

Please note that this product is only suitable for **internal** use.

MORE THAN JUST
MATTING

Disclaimer

These methods of installation make no claim to being comprehensive but should be used as a guide. Always employ safe practices. A risk assessment and method statement should always be prepared.

If in doubt please contact us:
01260 272313 | info@rubber-matting.co.uk